We're Building the Containers America is Asking For AMERI-KAN®

Rear Loading Refuse & Recycling Containers

Straight Containers

Models 100 (1 yard), 150 (1.5 yard), 200 (2 yard)

These straight AMERI-KAN models are user-designed to provide large capacity in a small space. They are exclusively engineered to be used with a hydraulic lift bar attachment or a side handle pickup with an option for overhead winch pickup. Lids on these models hinge behind the container, out of the way, for easy loading and dumping.

Model 100

Model 150

Model 200

"W-Caster Channel"
Custom built casters bolt onto exclusive "w-formed" channels. Caster steel and hardware is zinc plated. Special casters available upon request.

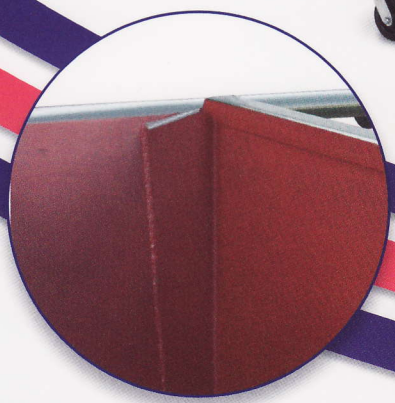

Wrapped Corners
Unique design eliminates butt-welds. Hydraulic lift models have reinforced strike points. Solid trunnion bars are double-gusseted for durability.

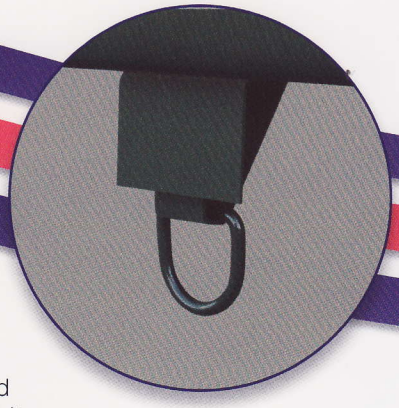

Winch Pickup
Optional rear winch cable pickup available on Models 100, 150, and 200. Specify factory installed or bolt-on model for field installation.

Sloped Containers

Models 201 (2 yard), 301 (3 yard)

These sloped AMERI-KAN models are constructed for commercial or industrial use. They will fit all current container attachments – hydraulic lift bar, side handle pick-up, or overhead winch. All models with casters will have full length caster channels, featuring the exclusive "W-formed" shape for added strength.

Model 201

Model 301

Drain Plug
A unique side design prevents clogging.

Taper-Formed Siderails
Heavy duty side handles, bridge-welded from outside to a plug weld on the inside panel for massive strength where it's needed most.

Clean Dumping
All containers have wrapped corners and floors that are continuously welded inside and skip welded outside. Tapered design allows a clean dump.

201/301 Rear Pickup
A custom fabricated cable pickup hook is standard on Models 201 and 301. The lower formed gusset spreads stress to the extra heavy rear rail.

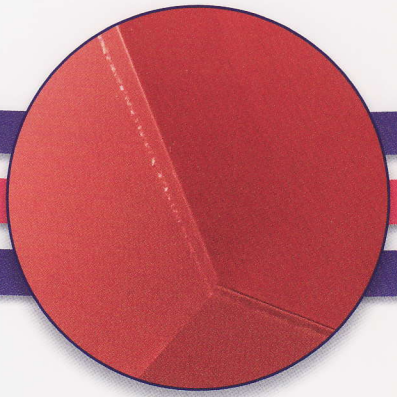

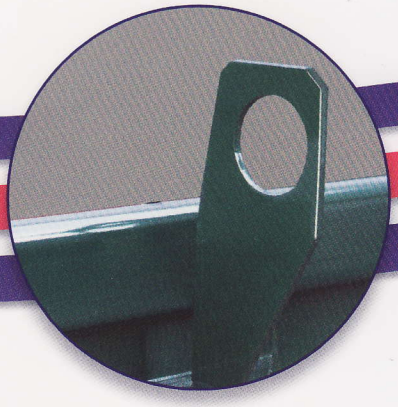

High Capacity Sloped Containers

Models 401 (4 yard), 601 (6 yard), 801 (8 yard)

These heavy duty, high capacity models are the workhorses of the industry. They are designed to handle the heavy, solid waste found in industrial and commercial establishments. These units can handle the loads compatable with the stronger winch pickups on today's modern packer trucks, yet are competitively priced with lesser models of the same capacity offered by many other manufacturers.

Model 401

Model 601

Model 801

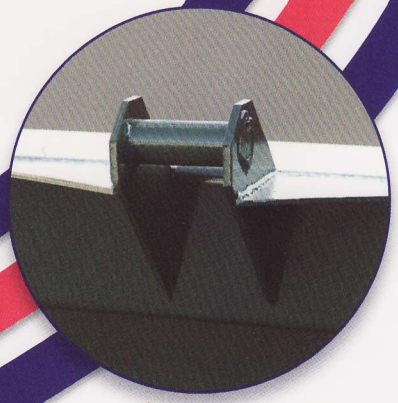

Unitized Pickup bar
Heavy duty rear winch pickup bar is unitized within the rear rail and bridged through the bottom of the rear rail to insure maximum strength and durability on Models 401, 401C, 601, and 801.

Swing-Away Lid Assembly
The full swing-away lid assembly coupled with a tapered design means a clean dump every time. Hinge points are located inside container for maximum safety.

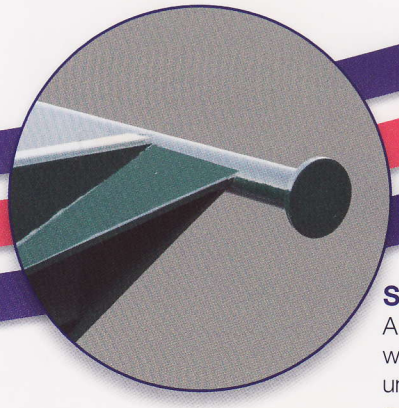

Superior Pivot Point
A structural trunnion bar, coupled with double gussets and solid inserts, unitized to super duty side rails make a superior pivot point on Models 401, 601 and 801.

Specifications

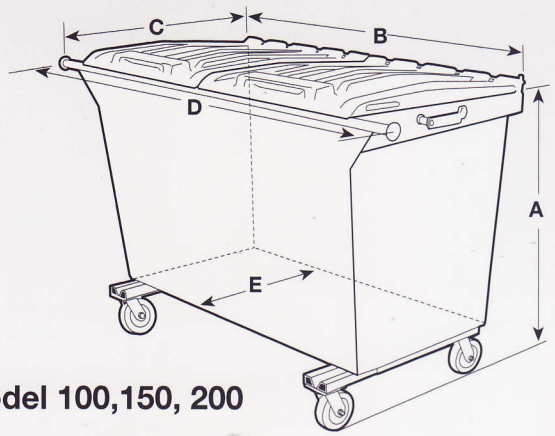

Model 100,150, 200

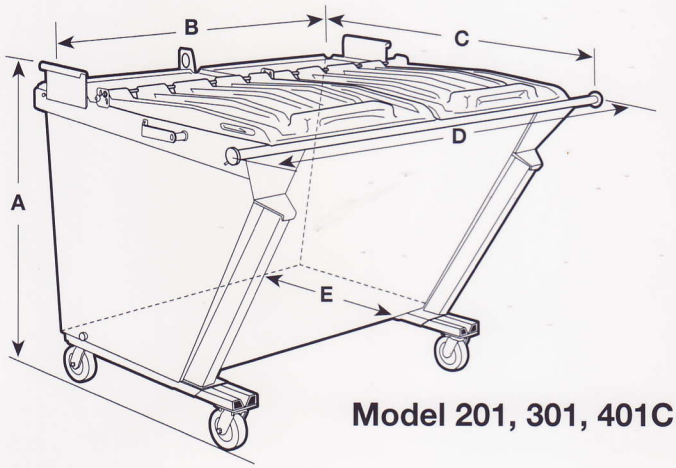

Model 201, 301, 401C

Straight and Sloped Container Specifications

Dimensions	100	150	200	201	301	401C
A (Outside)	46 ½"	43 ⅜"	49 ⅛"	48"	48 ⅜"	49 ¼"
B (Outside)	64 ¼"	64 ¼"	64 ¼"	64 ¼"	64 ¼"	64 ¼"
C (Outside)	29 ¾"	38 ⅜"	44 ¾"	59 ½"	77 ½"	86 ¼"
D (Outside)	77 ½"	77 ½"	77 ½"	77 ½"	77 ½"	77 ½"
E (Outside)	20 1⁄16"	28 9⁄16"	34 ½"	30 ¼"	48 ½"	48"
Specifications						
Cubic Yard Capacity	1	1 ½	2	2	3	4
Swivel Casters	2-6"	4-6"	4-6"	4-6"	4-6"	4-6"
Rigid Casters	2-6"	Opt	Opt	Opt	Opt	Opt
Sidewall Steel (Gauge)	14	14	14	14	14	12
Front, Back Bottom (Gauge)	14	14	14	12	12	12
Weight*	315	355	411	502	650	880

High Capacity Sloped Container Specifications

Dimensions	401	601	801
A (Outside)**	49 ½"	49 ½"	49 ½"
B (Outside)	64 ¼"	64 ¼"	64 ¼"
C (Outside)	86 ¼"	120 ¾"	154 ⅝"
D (Outside)	77 ½"	77 ½"	77 ½"
E (Outside)	48"	81 ⅜"	114 ⅛"
Specifications			
Cubic Yard Capacity	4	6	8
Swivel Casters	4-8" Opt.	4-8" Opt.	4-8" Opt.
Sidewall Steel (Gauge)	12	12	12
Front, Back, Bottom (Gauge)	12	12	12
Weight *	805	1170	1555

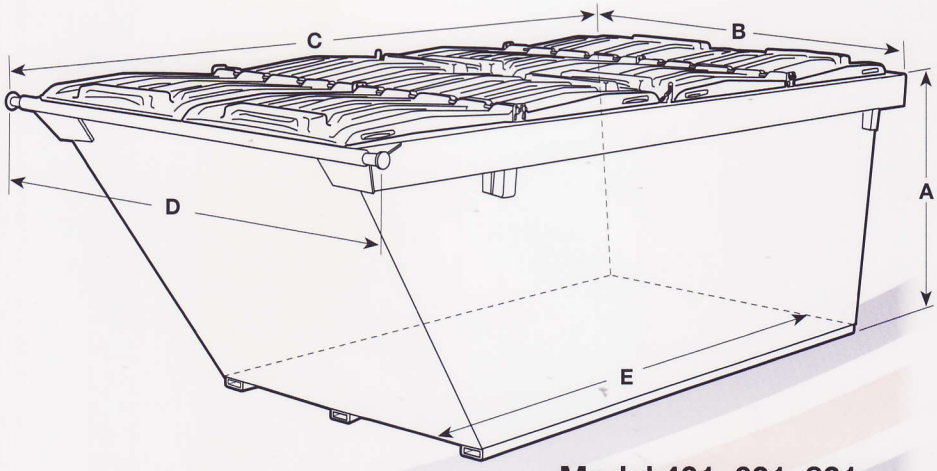

Model 401, 601, 801

**Above weights are containers with plastic lids.*

***When equipped with optional caster mounts, height dimension becomes 51".*

The company reserves the right under a policy of product improvement to change construction and design details and furnish equipment when so altered without reference to illustrations or specifications used herein.

AMERI-KAN containers meet or exceed all current U.S. Federal safety standards.

Baked On Enamel Paint Finishes

AMERI-KAN containers are phosphatized and cleaned prior to applying a corrosion-resistant primer then heat dried. The finish coat is industrial quality enamel, baked on at 320 degrees in your choice of standard green or brown, or other special-order colors.

The Covers America Is Asking For

Through years of listening and development, here's the answer to your #1 container problem (UNSAFE & DAMAGED LIDS)!

AMERI-KAN high-density polyethylene covers are custom-molded with premium quality U.V. stabilizers for flexibility and long life in any climate. The medium grey color (as shown) continues to look clean and pleasant with use, is attractively compatable with different container colors and is always comfortable to the touch in the hot sun. The "wide-stance" of our multiple hinge points and reinforcing ribs, along with the "crowned-design" assure strength, durability and complete water run-off. The large front and side handles are molded in (no added-on pieces) for easy opening. They are interchangeable left to right.

Yes – you can retrofit your existing AMERI-KAN containers with plastic lid assemblies. This all adds up to the versatile and affordable covers you've asked for!

AMERI-KAN galvanized covers are also available if desired. All metal covers have a full length rear rolled hinge eliminating cracking along welds. The sides are formed into a continuous easy to use handle. All AMERI-KAN containers are designed with swing-away lid assemblies with interchangeability of plastic and metal covers. Need special or custom covers? Just ask – AMERI-KAN is ready to provide all of your container needs.

At Your Service

For fast dependable service AMERI-KAN containers are sold through a nationwide network of stocking distributors. Your area distributor can help you make the best container/equipment match. They can supply you with containers from their stock or arrange for on-site deliveries from our manufacturing locations, with our crane-equipped delivery fleet.

Crane Equipped Delivery Fleet

So whether you need a single part or hundreds of containers, a call to your AMERI-KAN distributor will take care of all your needs.

Bristol, Indiana Since 1959

Warsaw, Indiana Since 1975

Commitment

AMERI-KAN is committed to building the containers America is asking for. AMERI-KAN couples the finest materials and processes with sound engineering and management to efficiently deliver your container requirements. Standard rear loading, front loading, or side loading containers, special options, or even custom models such as tow, compactor, or special location containers – we are here to help develop and produce whatever meets your needs.

We can custom design containers for your recycling needs.

As active members in Wastec and EIA, AMERI-KAN leadership personnel have been directly involved in the creation of industry safety and compatibility standard for over 37 years. We have been nationally recognized for our voluntary leadership service to the waste industry. Our on-going commitment is assurance to you of container safety, compatibility and dependability.

AMERI-KAN®

515 Anchorage Rd, Warsaw, Indiana 46580 • (800) 759-1095 • FAX (574) 533-7032
One Stoutco Drive, Bristol, Indiana 46507 • (800) 388-0078 • FAX (574) 848-4414
www.ameri-kan.com

NSWMA WASTEC
The Environmental Industry Associations

Waste Equipment Technology Association WASTEC MEMBER

SWANA SOLID WASTE ASSOCIATION of North America

HMG 20464.11 • Printed in USA